GAMER STORM®

CAPTAIN 240PRO V2

www.gamerstorm.com

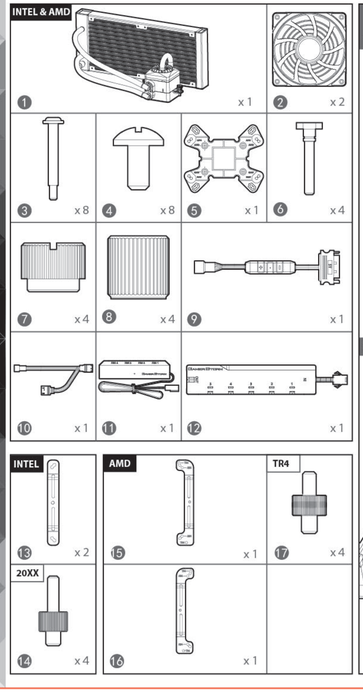

INTEL LGA1151 / LGA1150 / LGA1155 / LGA1366

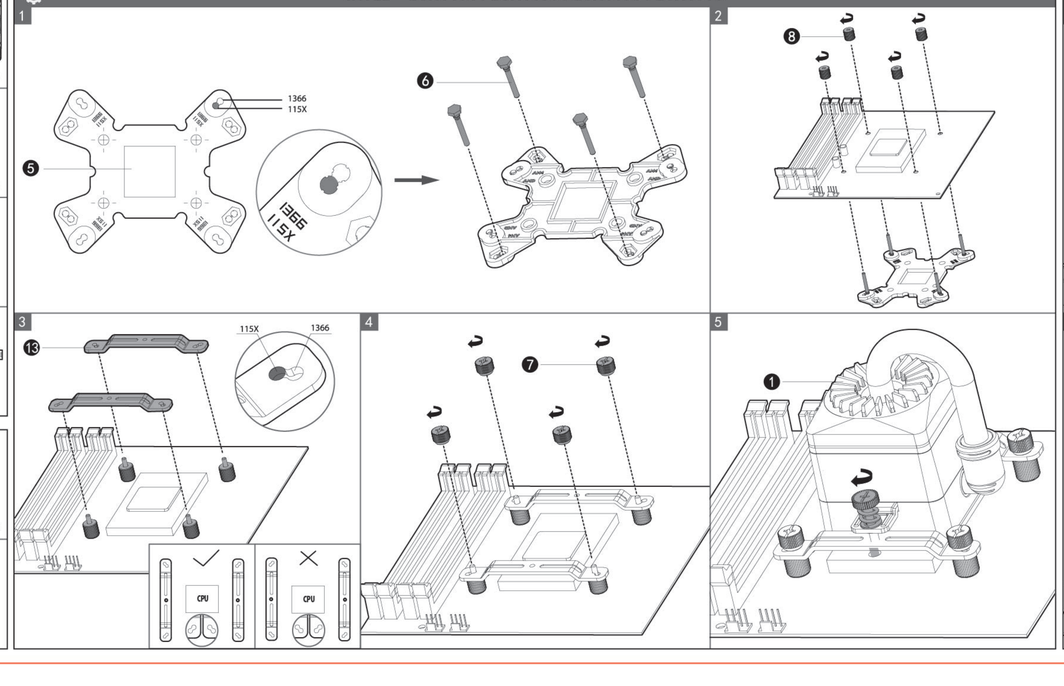

INTEL LGA2066 / LGA2011-v3 / LGA2011

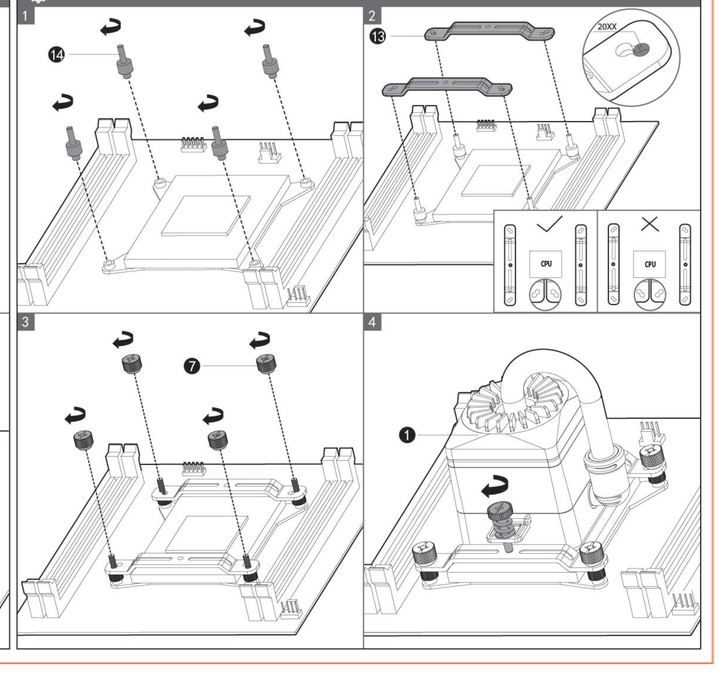

AMD AM4 / AM3+ / AM3 / AM2+ / AM2 / FM2+ / FM2 / FM1

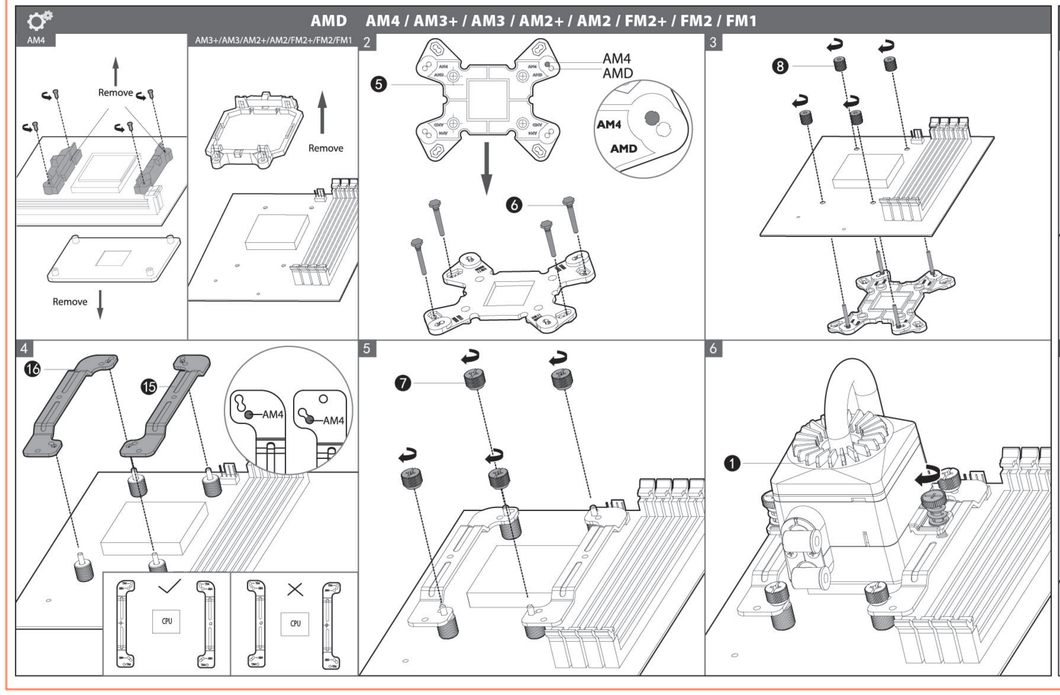

AMD TR4

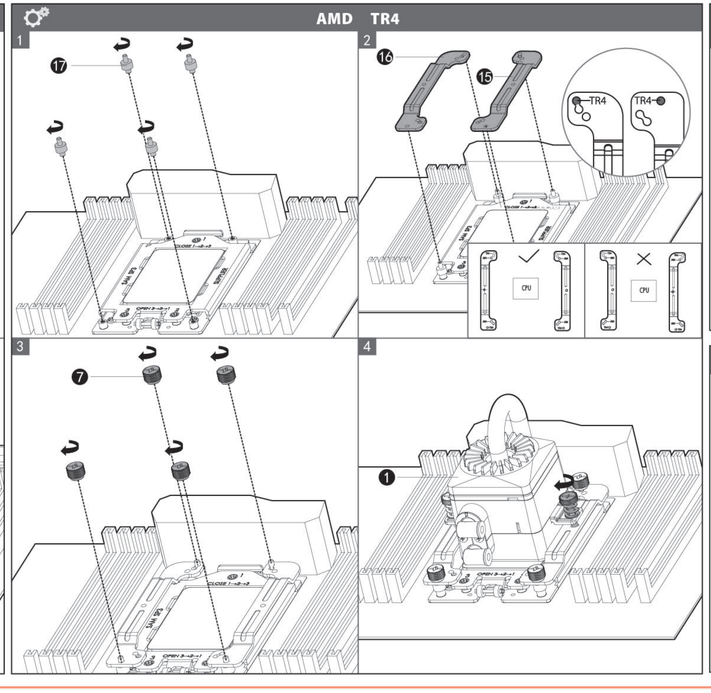

Fan & Radiator

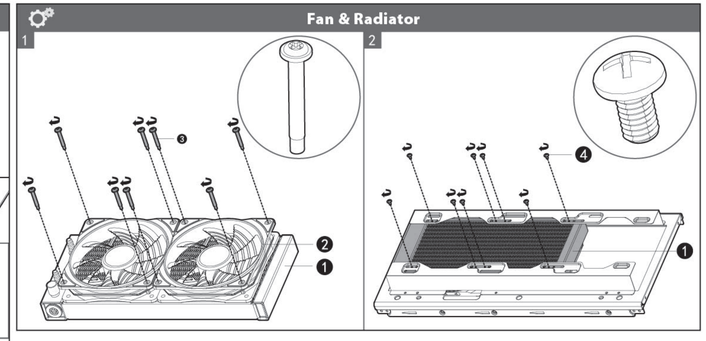
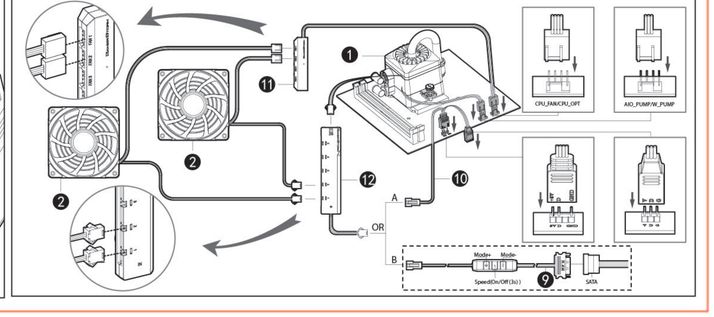
Connection